MAGNETIC LOCKS - Surface Mounted ML SERIES 1200P

ML01

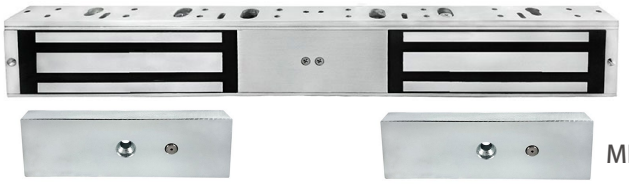

ML02

- Magnet (ML01) : 266L*73W*40D mm
- Armature Plate : 185L*61W*16T mm

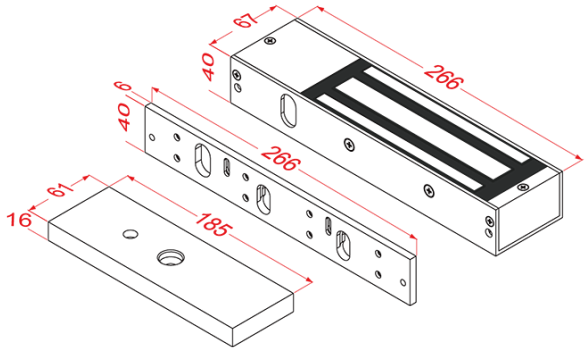

- Magnet (ML02) : 532L*73W*40D mm

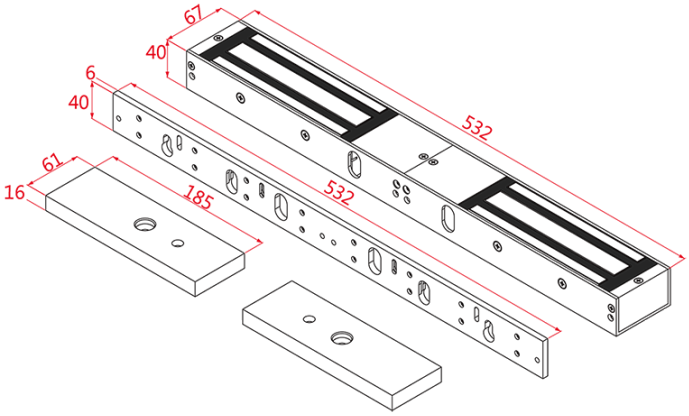

▼ ORDERING INFORMATION

ML 0X HT - DS

- ML: 1200LBS ML Series
- 0X: 1 Single size / 2 Double size / Customer size
- HT: Lock status sensor, LED; Timer(0~90 sec)
- DS: Door status sensor

EXAMPLE :

- ML01H : Maglock 1200P. W/Lock status sensor
- ML02H : Maglock 1200P. Double Size . W/Lock status sensor

▼ SPECIFICATION

- Voltage : 12V / 24VDC (Selectable)
- Current Draw : 500mA/12V , 250mA /24V
- Holding Force : about 1200 LBS
- Built-in voltage spike suppressor
- Special Finish : Zinc (on the magnet & armature plate)
- With Bi-color LED
- Anodized aluminum housing
- Adjustable mounting plate for appropriate and easy installation
- the length can be added according to customer's request

▼ FEATURES

- Horizontal or vertical installation
- Special mounting plate for fast , effort-saving, and simple installation

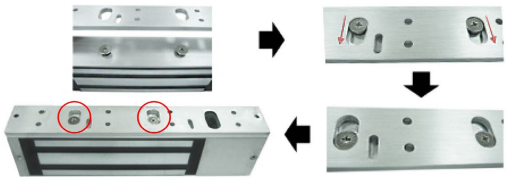

- Anti-dismounting and Anti-falling function

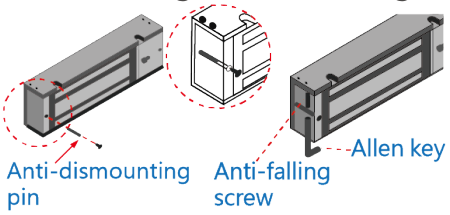

▼ BRACKETS INSTALLATION

B1003 - L Bracket
B1001 - Adjustable L Bracket

B1002A - L&Z Bracket

U-185 Bracket

Double size

B1004 / B1005

B0001A - Armature Plate Housing